Queen Mary
University of London
Science and Engineering

EBU4202: Digital Circuit Design
Combinational Logic Analysis and Design Tutorials

Dr. Md Hasanuzzaman Sagor (Hasan)

Dr. Chao Shu (Chao)

Dr. Farha Lakhani (Farha)

Dr. Fatma Benkhelifa

School of Electronic Engineering and Computer Science,

Queen Mary University of London,

London, United Kingdom.

BCD to 7-Segment Display

Exercise 1:

- *Design a code converter* to decode from BCD to a 7-segment display.
- The combinational circuit must accept a BCD digit *and* generate the appropriate outputs to display the digit in a 7-segment format as shown here.

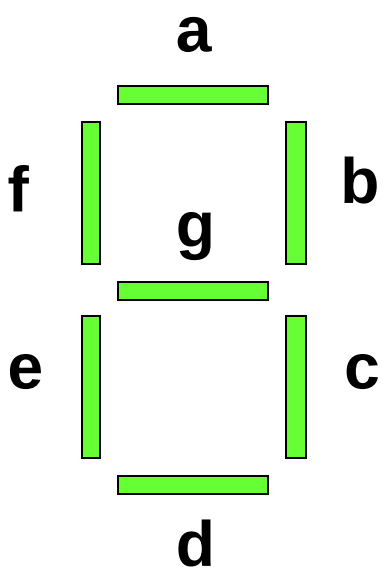

The example in the lecture notes blanks the display if a non-valid BCD number is entered.

This is design option 1.

See next slide

BCD to 7-Segment Display

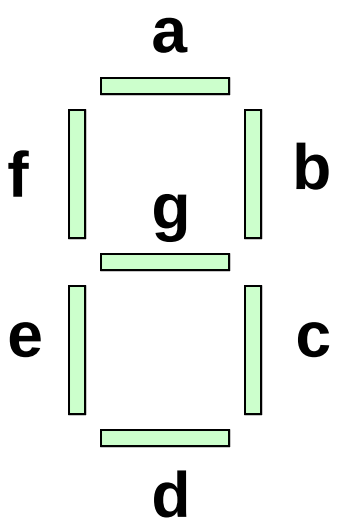

	A	B	C	D	a	b	c	d	e	f	g
0 ⇨	0	0	0	0	1	1	1	1	1	1	0
1 ⇨	0	0	0	1	0	1	1	0	0	0	0
2 ⇨	0	0	1	0	1	1	0	1	1	0	1
3 ⇨	0	0	1	1	1	1	1	1	0	0	1
4 ⇨	0	1	0	0	0	1	1	0	0	1	1
5 ⇨	0	1	0	1	1	0	1	1	0	1	1
6 ⇨	0	1	1	0	1	0	1	1	1	1	1
7 ⇨	0	1	1	1	1	1	1	0	0	0	0
8 ⇨	1	0	0	0	1	1	1	1	1	1	1
9 ⇨	1	0	0	1	1	1	1	1	0	1	1
	1	0	1	0	0	0	0	0	0	0	0
	1	0	1	1	0	0	0	0	0	0	0
	1	1	0	0	0	0	0	0	0	0	0
	1	1	0	1	0	0	0	0	0	0	0
	1	1	1	0	0	0	0	0	0	0	0
	1	1	1	1	0	0	0	0	0	0	0

Blank Display Problem

However, that gives a problem because a blank display could look as though the display has lost power. We would not know if the power had been lost or if a non-valid number had been entered.

What would be better is to display a character that tells us there is an error, for example display the character E.

This is design option 2.

Display Character E

Decimal	Binary Coded Decimal (BCD)				Display Segments						
	A	B	C	D	a	b	c	d	e	f	g
0	0	0	0	0	1	1	1	1	1	1	0
1	0	0	0	1	0	1	1	0	0	0	0
2	0	0	1	0	1	1	0	1	1	0	1
3	0	0	1	1	1	1	1	1	0	0	1
4	0	1	0	0	0	1	1	0	0	1	1
5	0	1	0	1	1	0	1	1	0	1	1
6	0	1	1	0	1	0	1	1	1	1	1
7	0	1	1	1	1	1	1	0	0	0	0
8	1	0	0	0	1	1	1	1	1	1	1
9	1	0	0	1	1	1	1	1	0	1	1
	1	0	1	0							
	1	0	1	1							
	1	1	0	0							
	1	1	0	1							
	1	1	1	0							
	1	1	1	1							

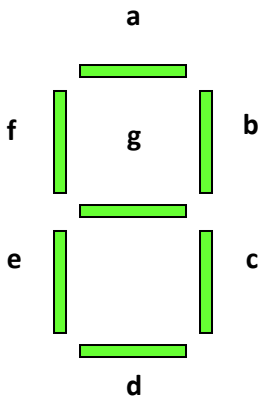

Display Character E

Decimal	Binary Coded Decimal (BCD)				Individual Segments							Display
	A	B	C	D	a	b	c	d	e	f	g	
0	0	0	0	0	1	1	1	1	1	1	0	0
1	0	0	0	1	0	1	1	0	0	0	0	1
2	0	0	1	0	1	1	0	1	1	0	1	2
3	0	0	1	1	1	1	1	1	0	0	1	3
4	0	1	0	0	0	1	1	0	0	1	1	4
5	0	1	0	1	1	0	1	1	0	1	1	5
6	0	1	1	0	1	0	1	1	1	1	1	6
7	0	1	1	1	1	1	1	0	0	0	0	7
8	1	0	0	0	1	1	1	1	1	1	1	8
9	1	0	0	1	1	1	1	1	0	1	1	9
	1	0	1	0	1	0	0	1	1	1	1	E
	1	0	1	1	1	0	0	1	1	1	1	E
	1	1	0	0	1	0	0	1	1	1	1	E
	1	1	0	1	1	0	0	1	1	1	1	E
	1	1	1	0	1	0	0	1	1	1	1	E
	1	1	1	1	1	0	0	1	1	1	1	E

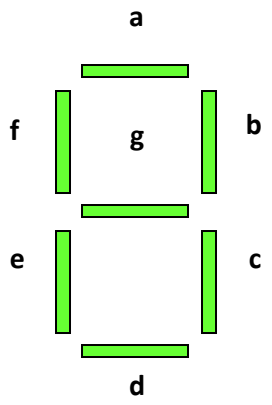

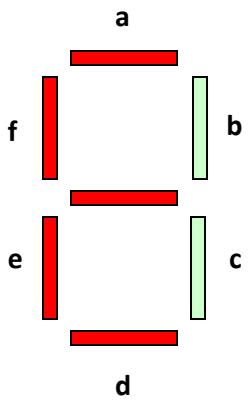

Construct the K-Maps for the 7 segments and draw the circuit diagrams.

AB \ CD	00	01	11	10
00	1	0	1	1
01	0	1	1	1
11	1	1	1	1
10	1	1	1	1

a = A + C +BD + B’D’

AB \ CD	00	01	11	10
00	1	1	1	1
01	1	0	1	0
11	0	0	0	0
10	1	1	0	0

b = A′B′ + A′C′D′ + A′CD + B′C′

AB \ CD	00	01	11	10
00	1	1	1	0
01	1	1	1	1
11	0	0	0	0
10	1	1	0	0

c = B’C’ + A’D + A’B

AB \ CD	00	01	11	10
00	1	0	1	1
01	0	1	0	1
11	1	1	1	1
10	1	1	1	1

d =?

AB \ CD	00	01	11	10
00	1	0	0	1
01	0	0	0	1
11	1	1	1	1
10	1	0	1	1

e =?

AB \ CD	00	01	11	10
00	1	0	0	0
01	1	1	0	1
11	1	1	1	1
10	1	1	1	1

f =?

AB \ CD	00	01	11	10
00	0	0	1	1
01	1	1	0	1
11	1	1	1	1
10	1	1	1	1

g =?

Construct the K-Maps for the 7 segments and draw the circuit diagrams

AB \ CD	00	01	11	10
00	1	0	1	1
01	0	1	1	1
11	1	1	1	1
10	1	1	1	1

a = A + C +BD + B’D’

AB \ CD	00	01	11	10
00	1	1	1	1
01	1	0	1	0
11	0	0	0	0
10	1	1	0	0

b = A′B′ + A′C′D′ + A′CD + B′C′

AB \ CD	00	01	11	10
00	1	1	1	0
01	1	1	1	1
11	0	0	0	0
10	1	1	0	0

c = B’C’ + A’D + A’B

AB \ CD	00	01	11	10
00	1	0	1	1
01	0	1	0	1
11	1	1	1	1
10	1	1	1	1

d = A + CD’ + B’D’ + B’C + BC’D

AB \ CD	00	01	11	10
00	1	0	0	1
01	0	0	0	1
11	1	1	1	1
10	1	0	1	1

e = AB + CD’ + B’D’ + AC

AB \ CD	00	01	11	10
00	1	0	0	0
01	1	1	0	1
11	1	1	1	1
10	1	1	1	1

f = A + C’D’ + BC’ + BD’

AB \ CD	00	01	11	10
00	0	0	1	1
01	1	1	0	1
11	1	1	1	1
10	1	1	1	1

g = A + BC’ + BD’ + B’C

Draw the circuit diagram for segment e

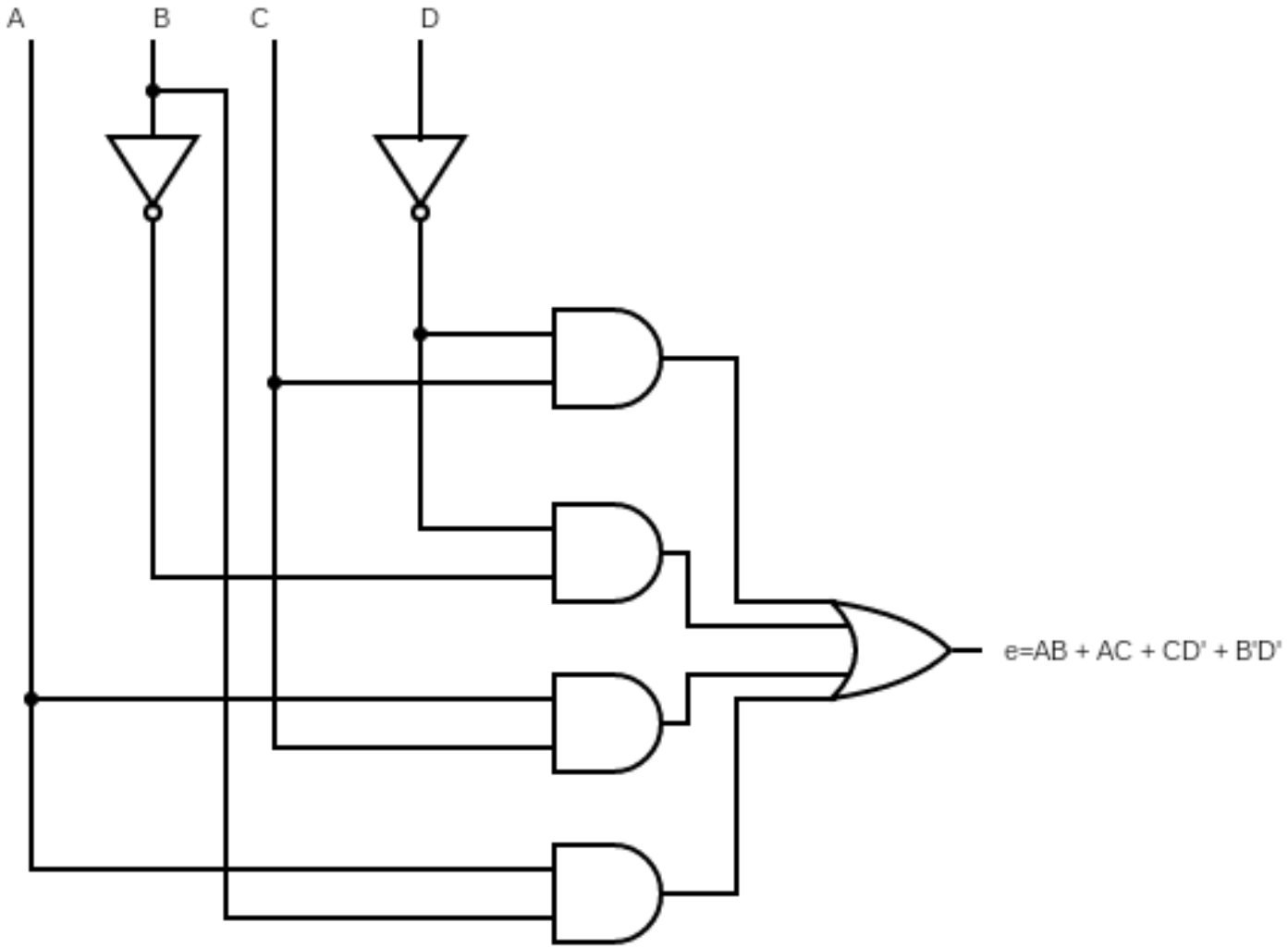

Test Segment e Logic Circuit

BCD Inputs

0 0 0 0

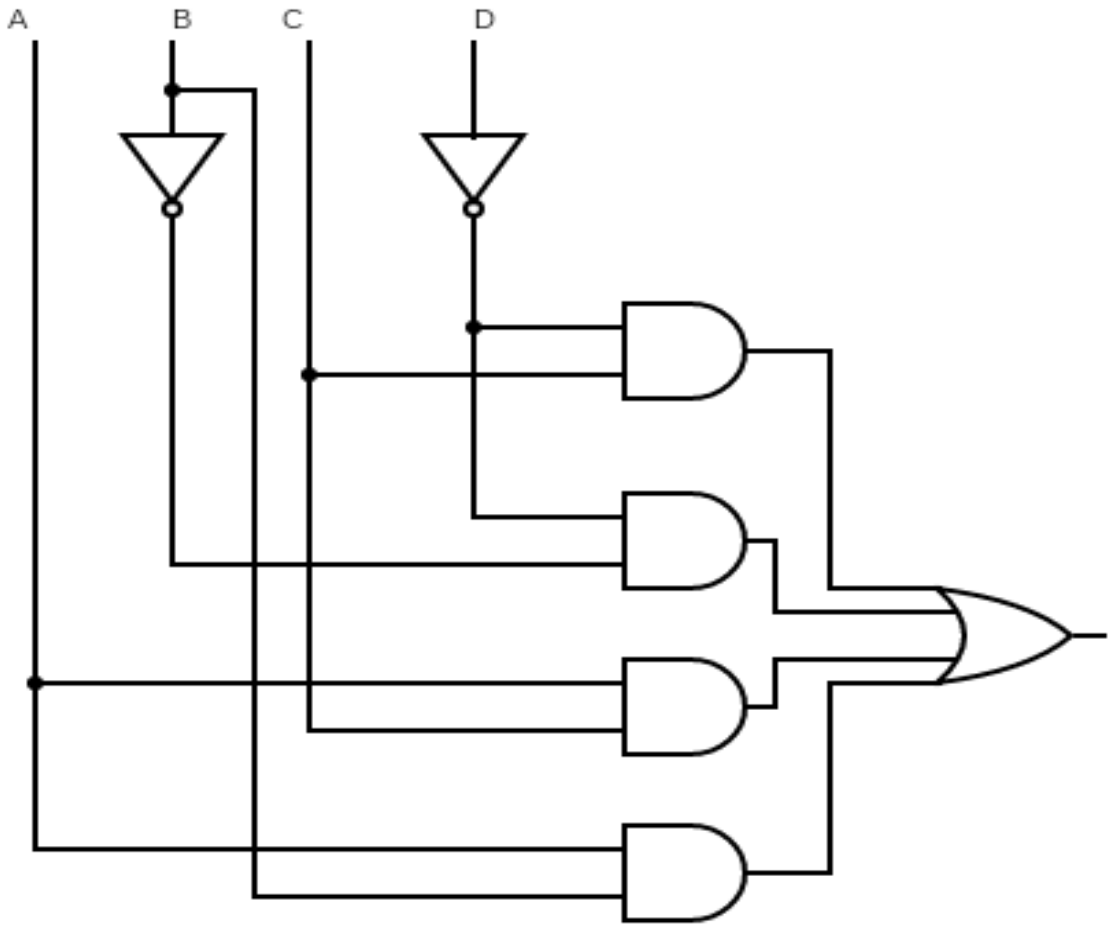

e = 1

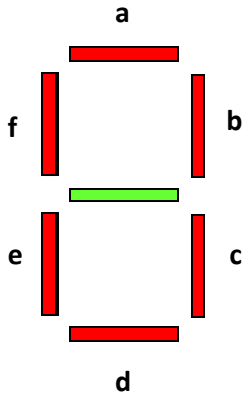

Test Segment e Logic Circuit

BCD Inputs

0 1 0 1

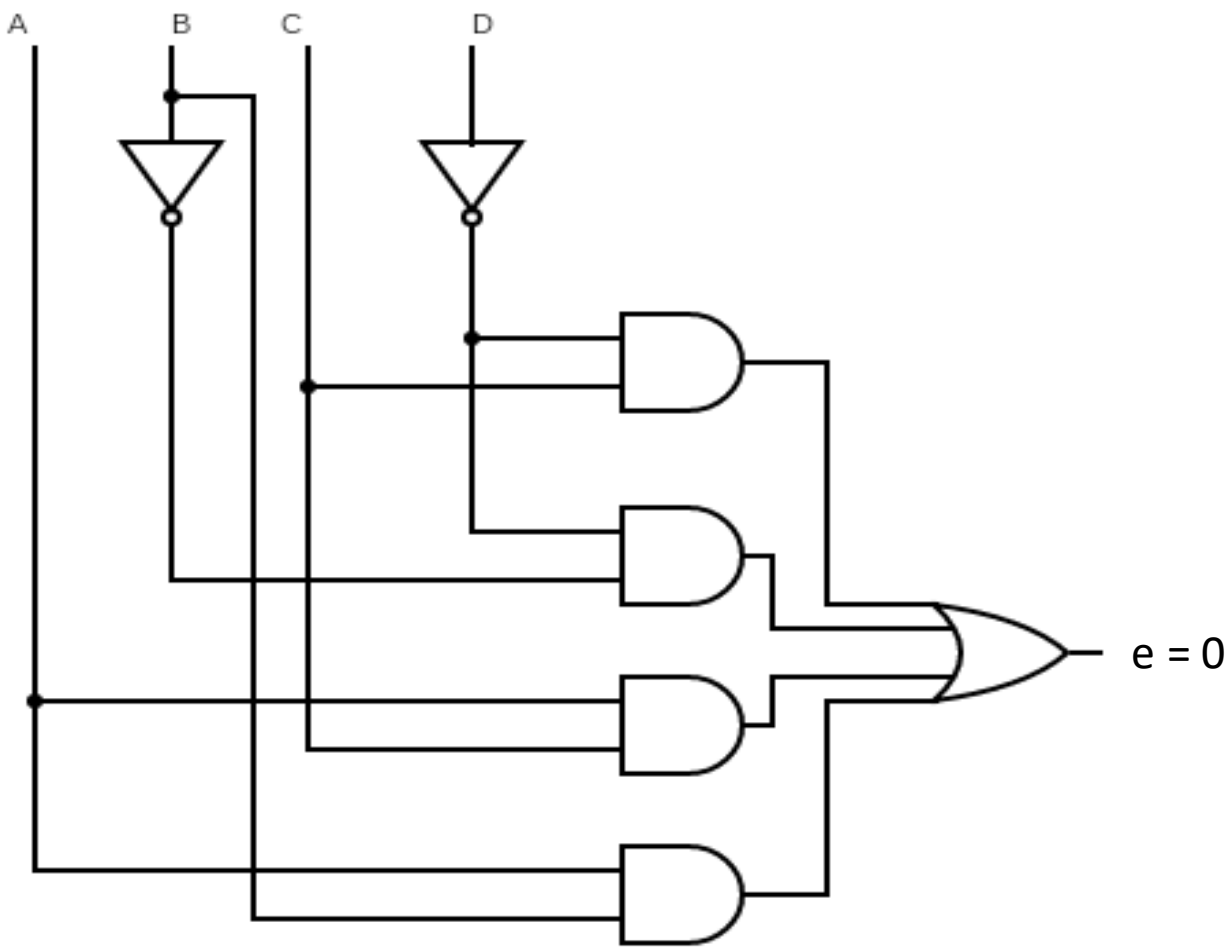

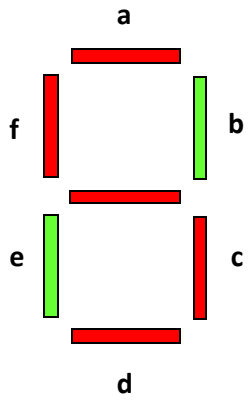

Test Segment e Logic Circuit

BCD Inputs

1 1 0 0

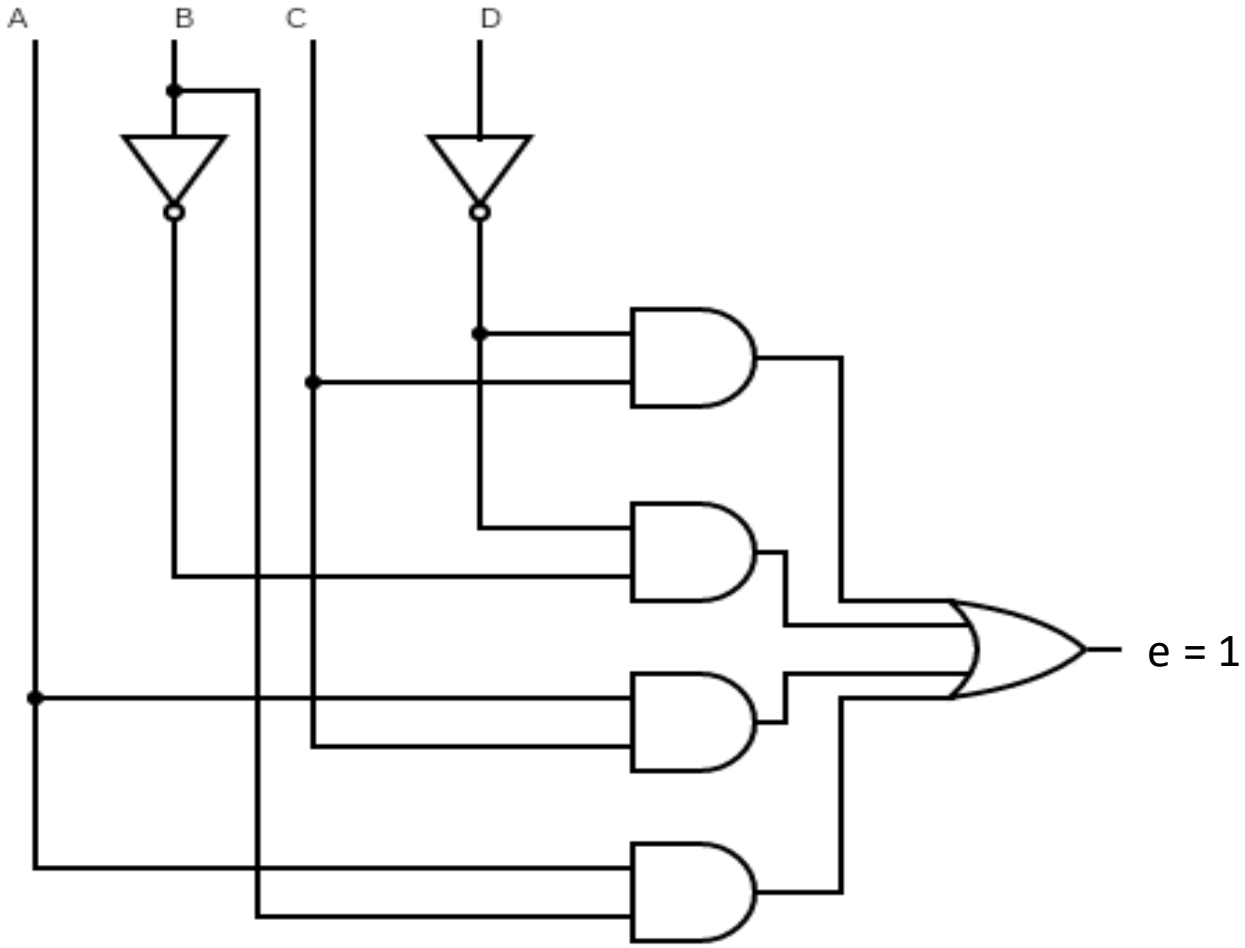

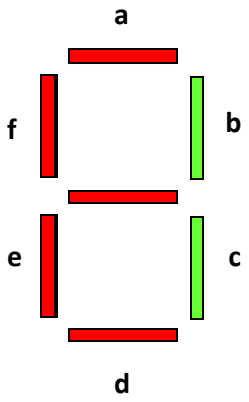

We can show invalid inputs by showing error character (E), however, this is not the minimum logic!

Test Segment e Logic Circuit

An alternative strategy could be to design for minimum logic (i.e. use Don’t Cares for the non-valid inputs).

This is design option 3.

However, that would give the problem of not knowing that would be displayed if a non-valid BCD input was applied.

We would then need to predict the display for each non-valid input.

Minimum Logic Design

Decimal	Binary Coded Decimal (BCD)				Display Segments						
	A	B	C	D	a	b	c	d	e	f	g
0	0	0	0	0	1	1	1	1	1	1	0
1	0	0	0	1	0	1	1	0	0	0	0
2	0	0	1	0	1	1	0	1	1	0	1
3	0	0	1	1	1	1	1	1	0	0	1
4	0	1	0	0	0	1	1	0	0	1	1
5	0	1	0	1	1	0	1	1	0	1	1
6	0	1	1	0	1	0	1	1	1	1	1
7	0	1	1	1	1	1	1	0	0	0	0
8	1	0	0	0	1	1	1	1	1	1	1
9	1	0	0	1	1	1	1	1	0	1	1
	1	0	1	0							
	1	0	1	1							
	1	1	0	0							
	1	1	0	1							
	1	1	1	0							
	1	1	1	1							

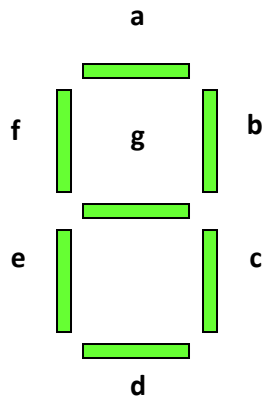

Minimum Logic Design

But now we would not know if the input was valid or invalid.

So, one answer would be to add an 8th segment that would be active if the input was non-valid.

Minimum Logic Design

Decimal	Binary Coded Decimal (BCD)				Display Segments							
	A	B	C	D	a	b	c	d	e	f	g	h
0	0	0	0	0	1	1	1	1	1	1	0	0
1	0	0	0	1	0	1	1	0	0	0	0	0
2	0	0	1	0	1	1	0	1	1	0	1	0
3	0	0	1	1	1	1	1	1	0	0	1	0
4	0	1	0	0	0	1	1	0	0	1	1	0
5	0	1	0	1	1	0	1	1	0	1	1	0
6	0	1	1	0	1	0	1	1	1	1	1	0
7	0	1	1	1	1	1	1	0	0	0	0	0
8	1	0	0	0	1	1	1	1	1	1	1	0
9	1	0	0	1	1	1	1	1	0	1	1	0
	1	0	1	0	X	X	X	X	X	X	X	1
	1	0	1	1	X	X	X	X	X	X	X	1
	1	1	0	0	X	X	X	X	X	X	X	1
	1	1	0	1	X	X	X	X	X	X	X	1
	1	1	1	0	X	X	X	X	X	X	X	1
	1	1	1	1	X	X	X	X	X	X	X	1

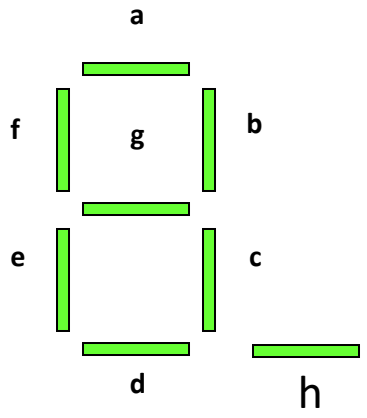

Construct the K-Maps for the 7 segments and draw the circuit diagrams

AB \ CD	00	01	11	10
00	1	0	1	1
01	0	1	1	1
11	X	X	X	X
10	1	1	X	X

a = A + C +BD + B'D'

AB \ CD	00	01	11	10
00	1	1	1	1
01	1	0	1	0
11	X	X	X	X
10	1	1	X	X

b = ?

AB \ CD	00	01	11	10
00	1	1	1	0
01	1	1	1	1
11	X	X	X	X
10	1	1	X	X

c = ?

AB \ CD	00	01	11	10
00	1	0	1	1
01	0	1	0	1
11	X	X	X	X
10	1	1	X	X

d = A + CD' + B'D' + B'C + BC'D

AB \ CD	00	01	11	10
00	1	0	0	1
01	0	0	0	1
11	X	X	X	X
10	1	0	X	X

e = ?

AB \ CD	00	01	11	10
00	1	0	0	0
01	1	1	0	1
11	X	X	X	X
10	1	1	X	X

f = A + C'D' + BC' + BD'

AB \ CD	00	01	11	10
00	0	0	1	1
01	1	1	0	1
11	X	X	X	X
10	1	1	X	X

g = A + C'D' + BD' + B'C

AB \ CD	00	01	11	10
00	0	0	0	0
01	0	0	0	0
11	1	1	1	1
10	0	0	1	1

h =?

Construct the K-Maps for the 7 segments and draw the circuit diagrams

AB \ CD	00	01	11	10
00	1	0	1	1
01	0	1	1	1
11	X	X	X	X
10	1	1	X	X

a = A + C +BD + B’D’

AB \ CD	00	01	11	10
00	1	1	1	1
01	1	0	1	0
11	X	X	X	X
10	1	1	X	X

b = B’ + C’D’ + CD

AB \ CD	00	01	11	10
00	1	1	1	0
01	1	1	1	1
11	X	X	X	X
10	1	1	X	X

c = B + C’ + D

AB \ CD	00	01	11	10
00	1	0	1	1
01	0	1	0	1
11	X	X	X	X
10	1	1	X	X

d = A + CD’ + B’D’ + B’C + BC’D

AB \ CD	00	01	11	10
00	1	0	0	1
01	0	0	0	1
11	X	X	X	X
10	1	0	X	X

e = B’D’ + CD’

AB \ CD	00	01	11	10
00	1	0	0	0
01	1	1	0	1
11	X	X	X	X
10	1	1	X	X

f = A + C’D’ + BC’ + BD’

AB \ CD	00	01	11	10
00	0	0	1	1
01	1	1	0	1
11	X	X	X	X
10	1	1	X	X

g = A + C’D’ + BD’ + B’C

AB \ CD	00	01	11	10
00	0	0	0	0
01	0	0	0	0
11	1	1	1	1
10	0	0	1	1

h = AB + AC

Minimum Logic….effect of groupings

Decimal	Binary Coded Decimal (BCD)				Display Segments							
	A	B	C	D	a	b	c	d	e	f	g	h
0	0	0	0	0	1	1	1	1	1	1	0	0
1	0	0	0	1	0	1	1	0	0	0	0	0
2	0	0	1	0	1	1	0	1	1	0	1	0
3	0	0	1	1	1	1	1	1	0	0	1	0
4	0	1	0	0	0	1	1	0	0	1	1	0
5	0	1	0	1	1	0	1	1	0	1	1	0
6	0	1	1	0	1	0	1	1	1	1	1	0
7	0	1	1	1	1	1	1	0	0	0	0	0
8	1	0	0	0	1	1	1	1	1	1	1	0
9	1	0	0	1	1	1	1	1	0	1	1	0
invalid	1	0	1	0	1	1	0	1	1	1	1	1
9	1	0	1	1	1	1	1	1	0	1	1	1
9	1	1	0	0	1	1	1	1	0	1	1	1
5	1	1	0	1	1	0	1	1	0	1	1	1
5	1	1	1	0	1	0	1	1	0	1	1	1
9	1	1	1	1	1	1	1	1	0	1	1	1

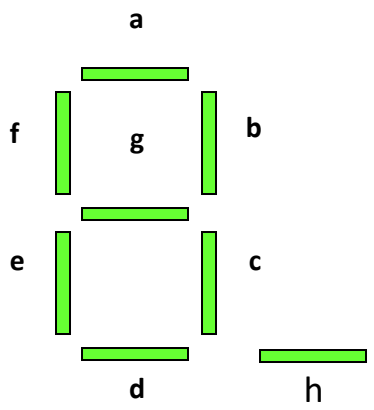

Draw the circuit diagram…

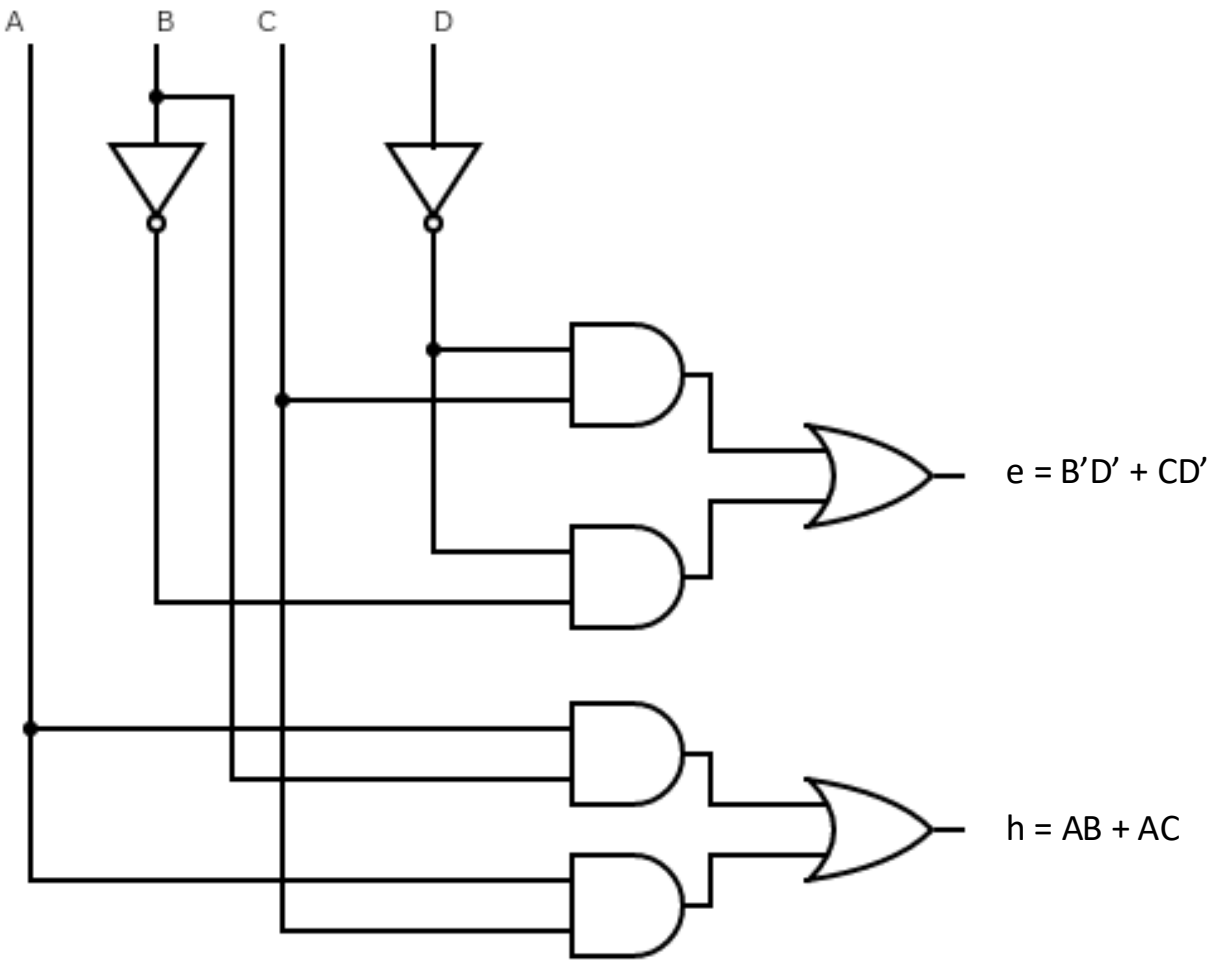

Test Segments e and h Logic Circuit

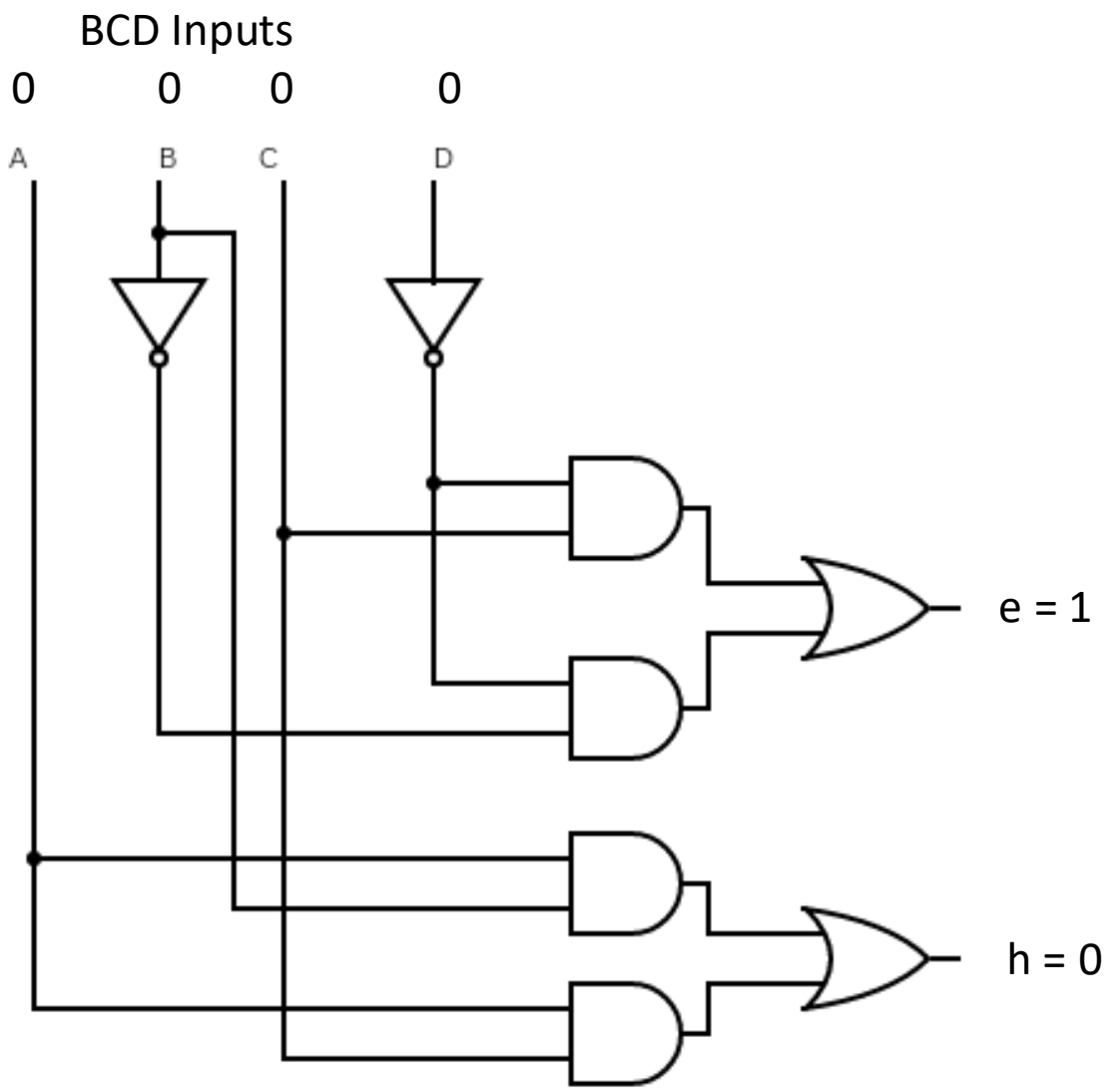

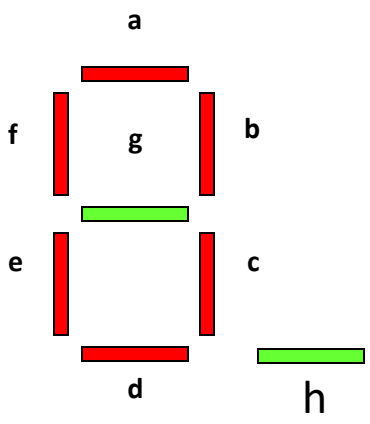

Test Segments e and h Logic Circuit

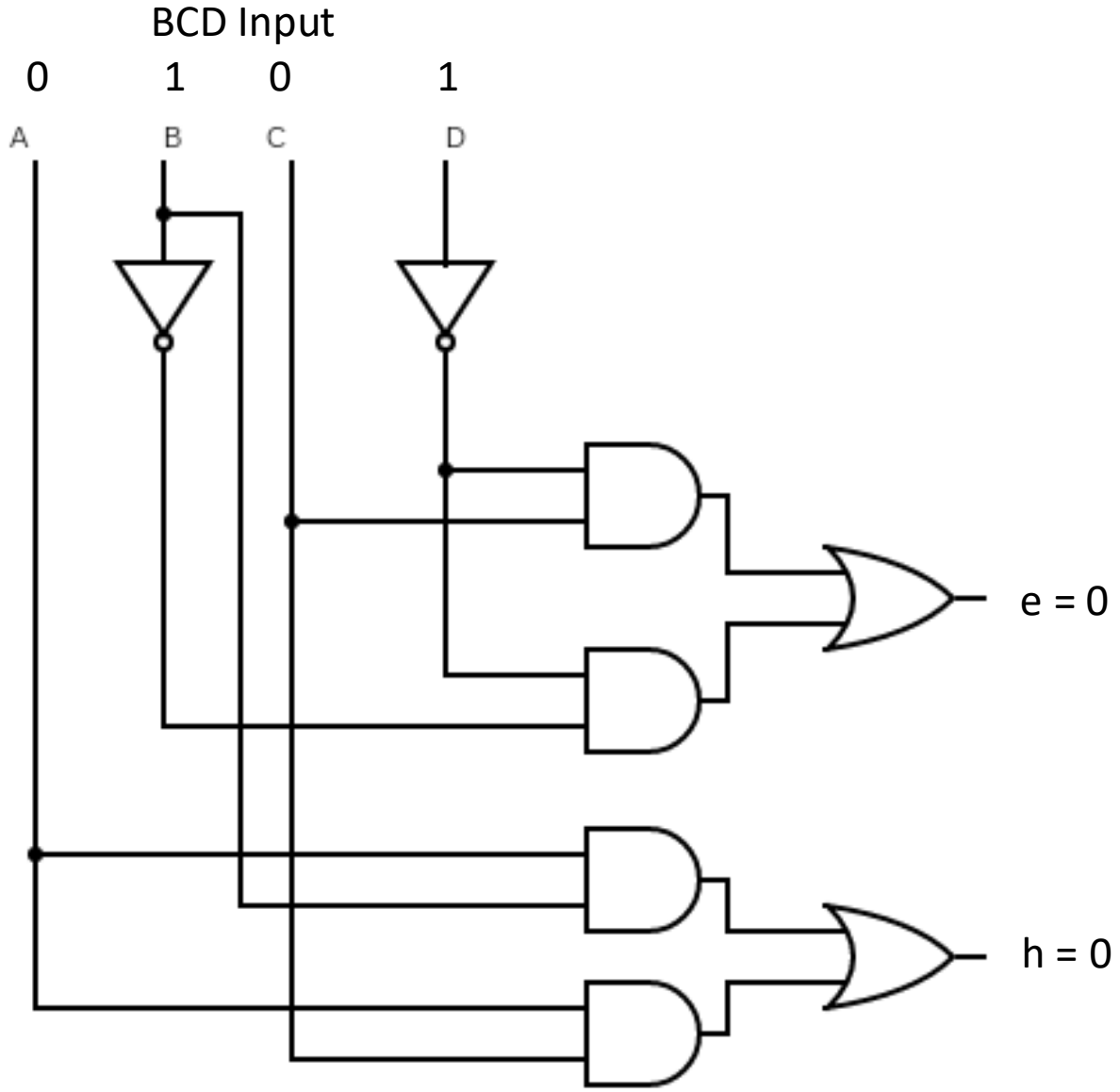

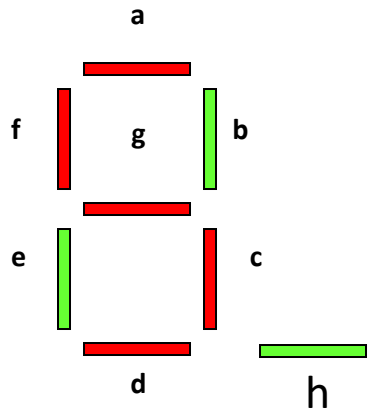

Test Segments e and h Logic Circuit

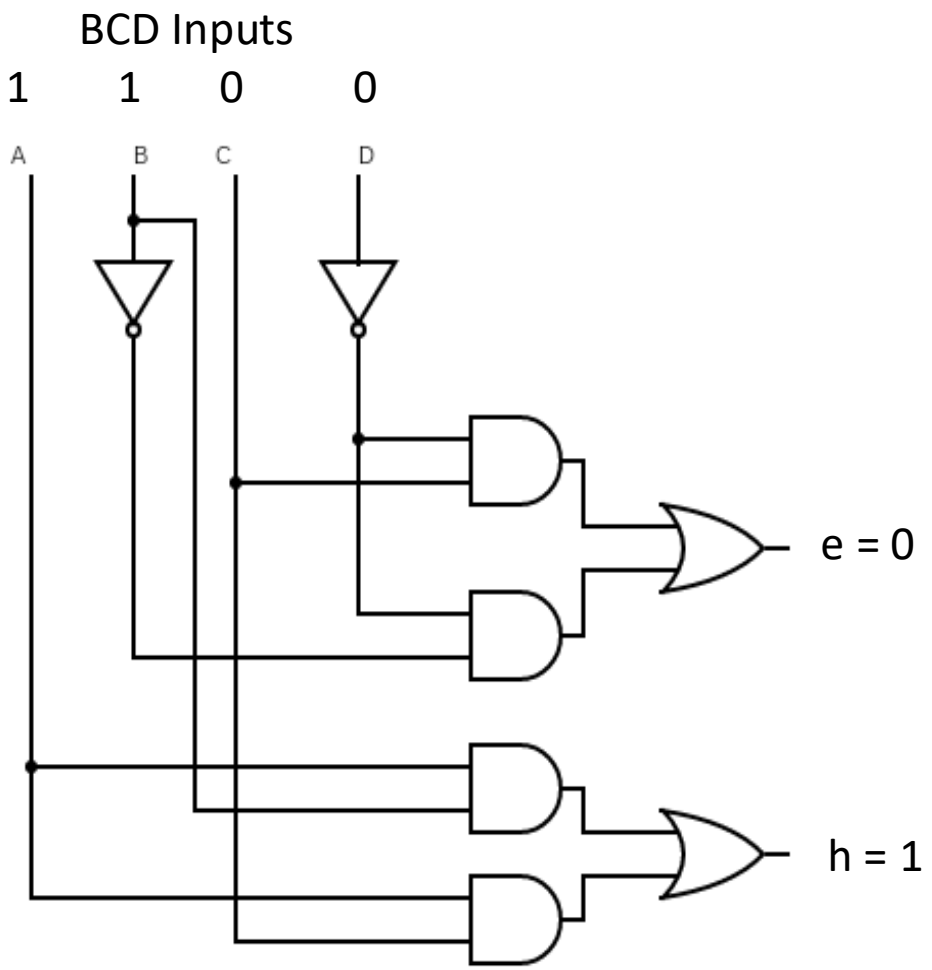

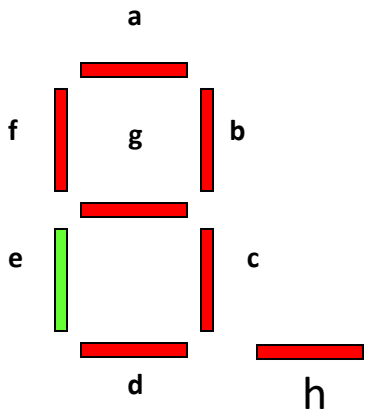

- Even though the invalid inputs do not show error character (E) with this minimum logic.
- However, the additional segment (h) can clearly tell that the inputs are invalid by turning itself on.
  - h = ON means invalid inputs.
  - h = OFF means valid inputs and expects to display the correct digit for corresponding inputs.

Exercise

Exercise 2: *Using a 5-variable Karnaugh Map, find the minimal PoS for the Boolean function:*

$$F(A, B, C, D, E) = \Sigma m(1, 3, 5, 8, 10, 12, 16, 20, 21, 25) + d(0, 4, 7, 28, 30)$$

Example

Exercise 2: Using a 5-variable Karnaugh Map, find the minimal PoS for the Boolean function:

$$F(A, B, C, D, E) = \Sigma m(1, 3, 5, 8, 10, 12, 16, 20, 21, 25) + d(0, 4, 7, 28, 30)$$

A = 0

BC \ DE	00	01	11	10
00	0: x	1: 1	3: 1	2: 0
01	4: x	5: 1	7: x	6: 0
11	12: 1	13: 0	15: 0	14: 0
10	8: 1	9: 0	11: 0	10: 1

A = 1

BC \ DE	00	01	11	10
00	16: 1	17: 0	19: 0	18: 0
01	20: 1	21: 1	23: 0	22: 0
11	28: x	29: 0	31: 0	30: x
10	24: 0	25: 1	27: 0	26: 0

Exercise 2: *Using a 5-variable Karnaugh Map, find the minimal PoS for the Boolean function:*

$$F(A, B, C, D, E) = \Sigma m(1, 3, 5, 8, 10, 12, 16, 20, 21, 25) + d(0, 4, 7, 28, 30)$$

A = 0

BC \ DE	00	01	11	10
00	0: x	1: 1	3: 1	2: 0
01	4: x	5: 1	7: x	6: 0
11	12: 1	13: 0	15: 0	14: 0
10	8: 1	9: 0	11: 0	10: 1

A = 1

BC \ DE	00	01	11	10
00	16: 1	17: 0	19: 0	18: 0
01	20: 1	21: 1	23: 0	22: 0
11	28: x	29: 0	31: 0	30: x
10	24: 0	25: 1	27: 0	26: 0

F = (C'+D') (A'+D')(A+B'+E')(B+D'+E)(A'+B'+C')(A'+B'+E)(A'+B+C+E')

Elevator Door Control Logic Design

Exercise 3: Design Elevator Door Control Logic Circuit

Let's design a logic circuit that controls an elevator door in a three-story building. The circuit in Figure below has four inputs, where

→*M* is a logic signal that indicates when the elevator is moving (*M* = 1) or stopped (*M* = 0),

→*F1*, *F2*, and *F3* are floor indicator signals that are normally LOW, and they go HIGH only when the elevator is positioned at the level of that particular floor.

→For example, when the elevator is lined up level with the second floor, *F2* = 1 and *F1* = *F3* = 0.

→The circuit output is the *OPEN* signal, which is normally LOW and will go HIGH when the elevator door is to be opened.

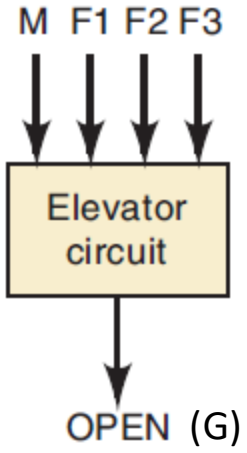

- Write the corresponding truth table (you must identify "don't care" conditions).
- Construct K-Map for the elevator door control system to generate the simplest
- (MINIMAL) SoP form and draw the circuit diagram.

Truth Table

Few notes:

- The elevator cannot be lined up with more than one floor at a time
  - Only one of the floor inputs (either F1, F2 or F2) can be HIGH at any given time.
  - Don't care condition: where more than one floor input is a 1 – we can place an *X* in the output, i.e., G = X.
- Output column for those eight cases where more than one *F* input is 1.
- Looking at the other eight cases, when M = 1 the elevator is moving, so G (output) must be a 0 because we do not want the elevator door to open.
- When M = 0 (elevator stopped), we want the output, G = 1 provided that one of the floor inputs is 1.
  - When M = 0 and all floor inputs are 0, the elevator is stopped but is not properly lined up with any floor, so we want the output G = 0 to keep the door closed.

M	F1	F2	F3	G
0	0	0	0	
0	0	0	1	
0	0	1	0	
0	0	1	1	
0	1	0	0	
0	1	0	1	
0	1	1	0	
0	1	1	1	
1	0	0	0	
1	0	0	1	
1	0	1	0	
1	0	1	1	
1	1	0	0	
1	1	0	1	
1	1	1	0	
1	**1**	**1**	**1**	

Truth Table

Few notes:

- The elevator cannot be lined up with more than one floor at a time
  - Only one of the floor inputs (either F1, F2 or F2) can be HIGH at any given time.
  - Don't care condition: where more than one floor input is a 1 – we can place an *X* in the output, i.e., G = X.
- Output column for those eight cases will be x, where more than one *F* input is 1.
- Looking at the other eight cases, when M = 1 the elevator is moving, so G (output) must be a 0 because we do not want the elevator door to open.
- When M = 0 (elevator stopped), we want the output, G = 1 provided that one of the floor inputs is 1.
  - When M = 0 and all floor inputs are 0, the elevator is stopped but is not properly lined up with any floor, so we want the output G = 0 to keep the door closed.

M	F1	F2	F3	G
0	0	0	0	**0**
0	0	0	1	**1**
0	0	1	0	**1**
0	0	1	1	**X**
0	1	0	0	**1**
0	1	0	1	**X**
0	1	1	0	**X**
0	1	1	1	**X**
1	0	0	0	**0**
1	0	0	1	**0**
1	0	1	0	**0**
1	0	1	1	**X**
1	1	0	0	**0**
1	1	0	1	**X**
1	1	1	0	**X**
1	**1**	**1**	**1**	**X**

Elevator Door Control Logic Design

Construct K-Map for the elevator door control system

M F1 \ F2 F3	00	01	11	10
00	0	1	X	1
01	1	X	X	X
11	0	X	X	X
10	0	0	X	0

Note: You can consider 'X' as either 1 or 0 to make larger groups.

G (M, F1, F2, F3) = ?

Elevator Door Control Logic Design

Construct K-Map

Remember: “can’t happen” inputs in theory may happen in practice. Think of the implications. Minimum logic is not always the best.

M F1 \ F2 F3	00	01	11	10
00	0	1	X	1
01	1	X	X	X
11	0	X	X	X
10	0	0	X	0

X can be considered as either 1 or 0.

M F1 \ F2 F3	00	01	11	10
00	0	1	1	1
01	1	1	1	1
11	0	0	0	0
10	0	0	0	0

$$G(M, F1, F2, F3) = M'F1 + M'F2 + M'F3$$
$$= M'(F1 + F2 + F3)$$

This is the best we can do as far as minimizing the output expression.

Elevator Door Control Logic Design

Draw the circuit diagram

G (M, F1, F2, F3) = M’(F1 + F2 + F3)

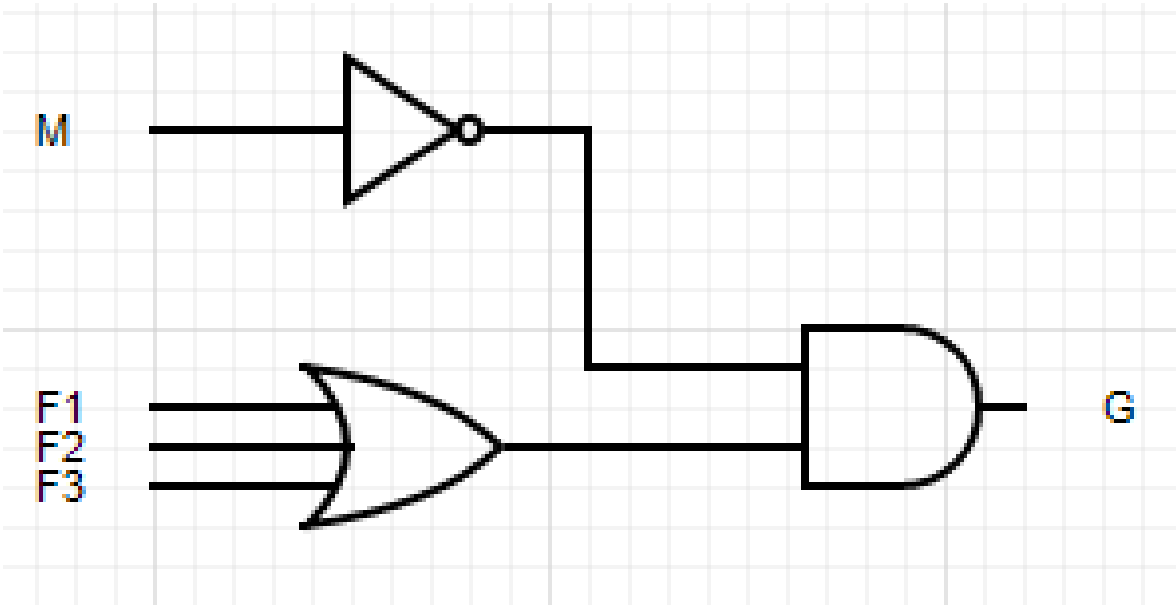

Integrated Circuits

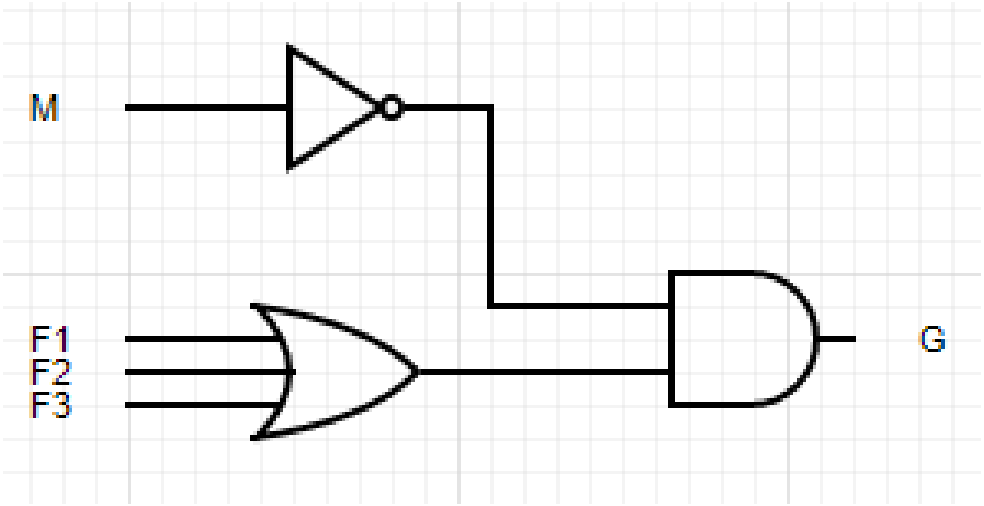

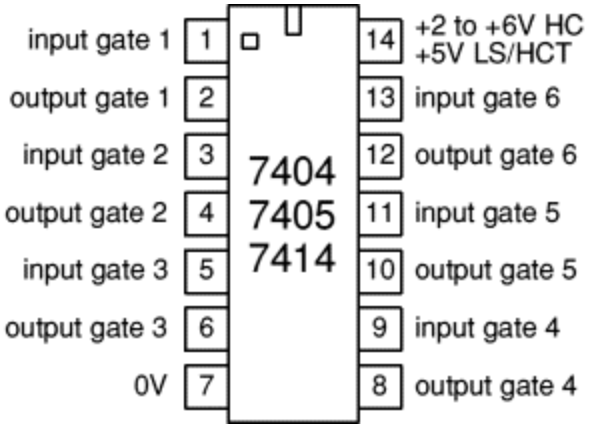

7404 Hex NOT Gate

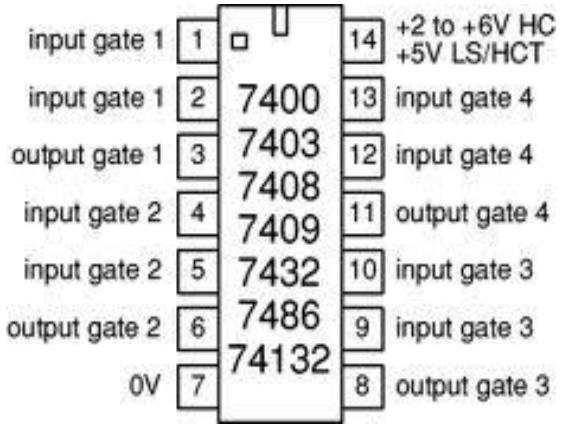

7408 Quad 2-input AND Gate

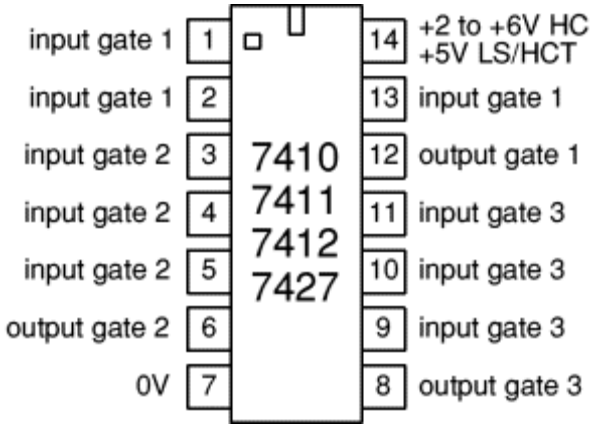

7427 Triple 3-input NOR Gate

Elevator Door Control Logic Design

Draw the circuit diagram

G (M, F1, F2, F3) = M'(F1 + F2 + F3)

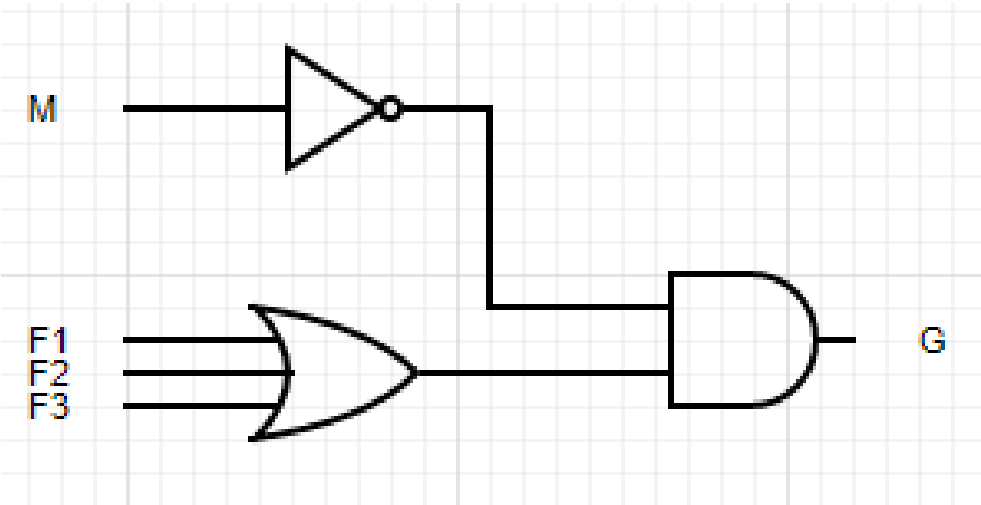

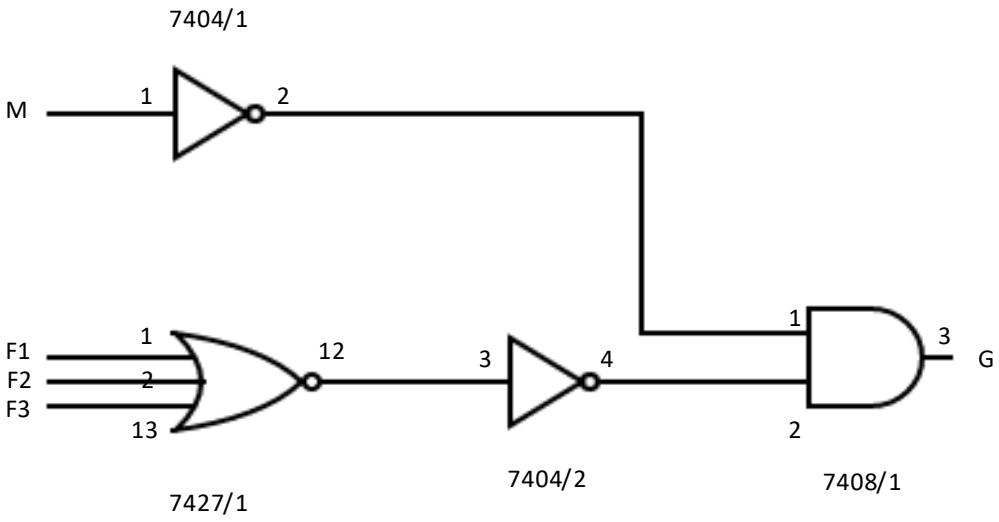

3 Integrated Circuits

Elevator Door Control Logic Design

Express the output, G in all NAND gates and draw the circuit diagram

$$G(M, F1, F2, F3) = M'(F1 + F2 + F3)$$

Elevator Door Control Logic Design

Express the output, G in all NAND gates and draw the circuit diagram

G (M, F1, F2, F3) = M’(F1 + F2 + F3)
= M’F1 + M’F2 + M’F3
= ((M’F1 + M’F2 + M’F3)’)’
= [(M’F1)’.(M’F2)’.(M’F3)’]’

Using De Morgan’s Theorem

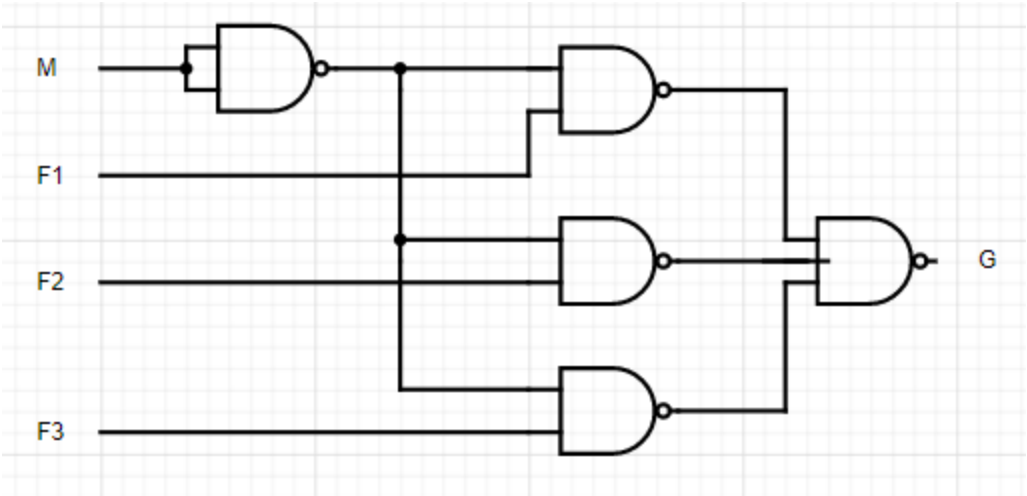

Elevator Door Control Logic Design

Integrated Circuits

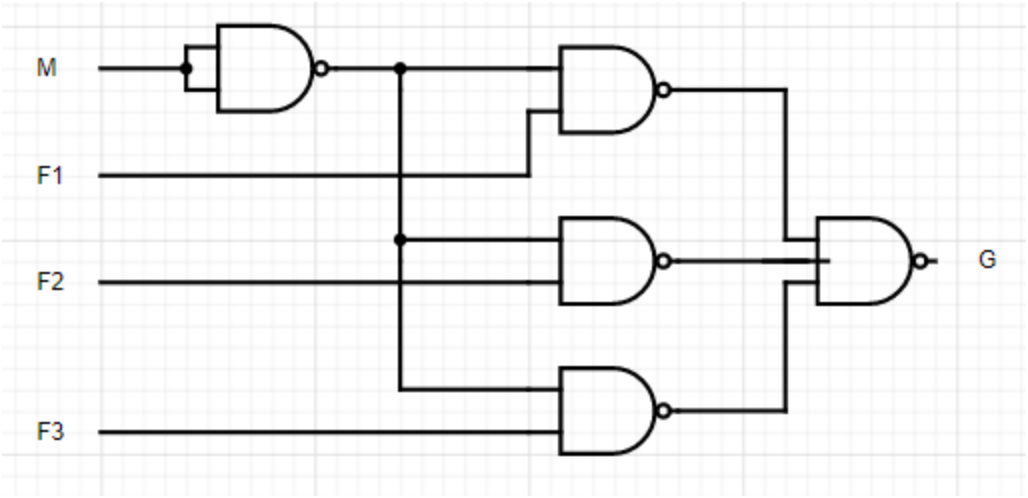

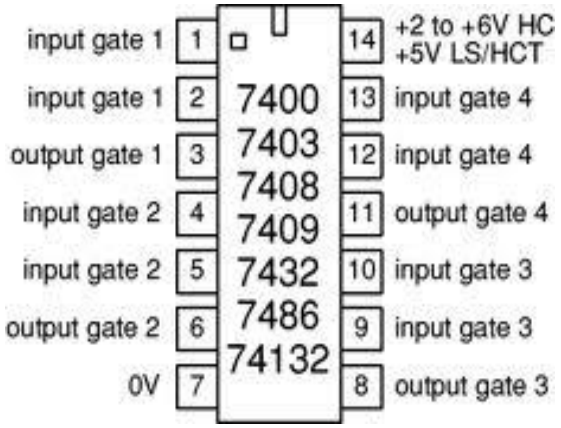

7400 Quad 2-input NAND Gate

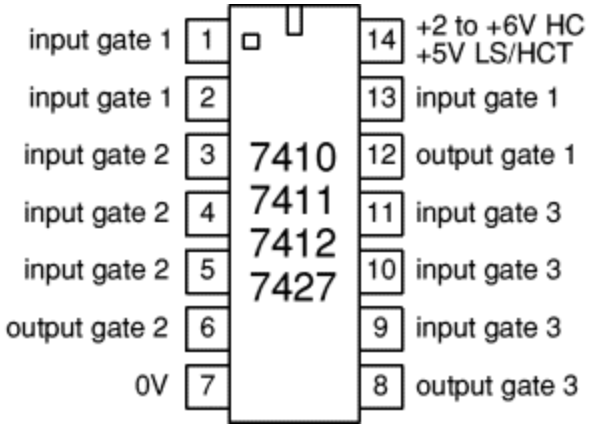

7411 Triple 3-input NAND Gate

Elevator Door Control Logic Design

Express the output, G in all NAND gates and draw the circuit diagram

G (M, F1, F2, F3) = M’(F1 + F2 + F3)
= ((M’F1 + M’F2 + M’F3)’)’
= [(M’F1)’.(M’F2)’.(M’F3)’]’

Using De Morgan’s Theorem

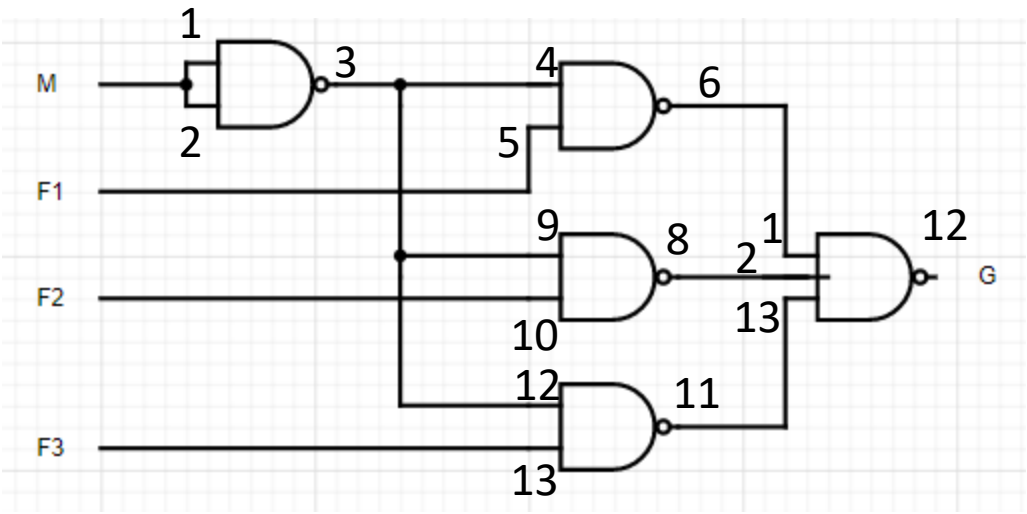

2 Integrated Circuits